FLOW-MONITORING DEVICE FOR A FLAVOR-GENERATING ARTICLE

BACKGROUND OF THE INVENTION

1. Field of the Invention

The present invention relates to a flow-monitoring device for a flavor-generating article. More particularly, the invention relates to an electro-mechanical air flow monitor adapted to initiate a heating sequence within an electric flavor-generating article.

2. Description of Related Art

A flavor-generating article is an article wherein a flavor-generating material, such as tobacco or a tobacco-derived substance, is heated, without tobacco combustion, to release tobacco or other flavors. In some such articles, a combustible heat source is used to heat the flavor-generating material and to thereby release the tobacco flavor. In other such articles, the flavor-generating material is heated electrically.

Certain electrically heated flavor-generating articles are described in commonly-assigned United States Patents Nos. 5,060,071 and 5,039,894, which are both hereby incorporated by reference in their entirety. In such flavor-generating articles, a flavor

2020057380

Source: https://www.industrydocuments.ucsf.edu/docs/ktgm0000

bed of flavor-generating material, such as tobacco or a tobacco-derived substance, is heated electrically, without tobacco combustion, to release tobacco flavors. As the material is heated, a user at the mouth or downstream end of the article draws air in and around the heating element, and thereby receives the tobacco flavor. Further, the flavor-generating articles are self-contained in articles the size and shape of a conventional cigarette.

In the electric flavor-generating articles described above, it has been proposed that a user's draw may be detected by a pressure or air flow sensor, which in turn may initiate heating of the flavor-generating material. But it has been found that in electric flavor-generating articles in particular, various non-draw activities can create an air flow or pressure change within the article to falsely or prematurely initiate the heating sequence. For example, if a user waves the article in his hands or otherwise agitates the article, the heating mechanism may be falsely triggered. Also, if a user talks while holding the article between his lips, the heating mechanism may be falsely or prematurely triggered.

These problems can be avoided by using an entirely different mechanism to control the heating sequence. One proposed mechanism involves the use of a push-button switch which a user must activate for each draw. This mechanism is itself unattractive, however, because it requires user action substantially different than that practiced by smokers of conventional cigarettes.

Accordingly, it is an object of the present invention to provide within an electric flavor-generating article an electro-mechanical air flow

2020057381

Source: https://www.industrydocuments.ucsf.edu/docs/ktgm0000

monitor which initiates heating of flavor-generating material.

It is also an object of the invention to provide an electro-mechanical air flow monitor that responds to a user's normal smoking behavior to initiate heating of flavor-generating material.

It is a further object of the invention to provide an electro-mechanical air flow monitor that is resistant to false non-draw air flow or pressure changes.

SUMMARY OF THE INVENTION

The present invention has been found to overcome the disadvantages of the prior art and provides an improved air flow monitor to initiate heating of flavor-generating material. In accordance with the invention, piezoelectric film is disposed within the air passage of an electric flavor-generating article such that it may be deflected or deformed in response to air flow within the passage, and thereby create an electric signal representative of such air flow to initiate heating of flavor-generating material. Various arrangements of piezoelectric pairs are provided in order to prevent false or premature triggering of the heating sequence. Alternatively, a pair of conductive films are circuited to act as capacitor plates and are disposed within the air passage such that, in response to a user's draw, they are displaced in relation to each other, and thereby create an electric signal representative of such draw to initiate heating of flavor-generating material.

2020057382

BRIEF DESCRIPTION OF THE DRAWINGS

The above and other objects and advantages of the invention will be apparent from the following

Source: https://www.industrydocuments.ucsf.edu/docs/ktgm0000

detailed description, taken in conjunction with the accompanying drawings, in which like reference numerals refer to like parts throughout, and in which:

FIG. 1A is a side view of an electric flavor-generating article, with a first preferred embodiment of the present invention therewithin, and with several portions of the drawing cut away to show the internal components of the article;

FIG. 1B is a cross-sectional view, taken through the line a-b, of the article of FIG. 1A;

FIG. 2A is a side view of an electric flavor-generating article, with a second preferred embodiment of the present invention therewithin, and with several portions of the drawing cut away to show the internal components of the article;

FIG. 2B is a cross-sectional view, taken through the line a-b, of the article of FIG. 2A;

FIG. 3A is a side view of an electric flavor-generating article, with a third preferred embodiment of the present invention therewithin, and with several portions of the drawing cut away to show the internal components of the article;

FIG. 3B is a cross-sectional view, taken through the line a-b, of the article of FIG. 3A, and a symbolic representation of a differential amplifier circuit;

FIG. 4A is a side view of an electric flavor-generating article, with a fourth preferred embodiment of the present invention therewithin, and with several portions of the drawing cut away to show the internal components of the article, and a symbolic representation of an electric summing circuit;

FIG. 4B is a top view of the article of FIG. 4A;

2020053383

Source: https://www.industrydocuments.ucsf.edu/docs/ktgm0000

FIG. 5A is a side view of an electric flavor-generating article, with a fifth preferred embodiment of the present invention therewithin, and with several portions of the drawing cut away to show the internal components of the article, and a symbolic representation of a capacitance circuit; and

FIG. 5B is a top view of the article of FIG. 5A.

DETAILED DESCRIPTION OF THE PREFERRED EMBODIMENTS

The electro-mechanical air flow monitor of the present invention is movably disposed within the air flow passage (or channel) of a flavor-generating article such that it can monitor the air flow created by a user's draw. The air flow monitor responds mechanically to the air flow within the passage, and thereby creates an electric signal representative of such air flow to initiate the heating sequence.

The present invention is herein more particularly described below, with reference to the drawings. An embodiment of the electro-mechanical air flow monitor is shown in FIG. 1, where the air flow monitor 10 includes a piezoelectric film 11 which has one end fixed to the inside wall of the flavor-generating article 20 and the other end movably disposed (as a cantilever) within the air flow passage 30 of the flavor-generating article 20. The piezoelectric film is deflected, or deformed, in response to a user's draw. Due to the nature of piezoelectric film, which is available from ATO Chem Sensor, Inc., Valley Forge, PA, an electric charge is created in response to, and representative of, such deflection. That electric charge, or signal, may directly activate heating of flavor-generating material, or as is preferred, and as is described in

2020057384

Source: https://www.industrydocuments.ucsf.edu/docs/ktgm0000

more detail below, that signal may be forwarded to an electric control circuit which operates to assure that the heating sequence is initiated only in response to a true draw signal.

Alternatively, as shown in FIG. 2, a piezoelectric film disc 12 (with or without an air hole at its center) can be disposed within the air flow passage of a flavor-generating article. The disc similarly responds to a user's draw, and similarly creates an electric signal to initiate heating of flavor-generating material.

A preferred embodiment is shown in FIG. 3, where a second piezoelectric film 13 is similarly fixed at one end to the inside wall of the flavor-generating article. The other end, however, is not disposed within the air flow passage of the article. Rather, the free end is positioned (also as a cantilever) within the article adjacent the first piezoelectric film 11, but not within the air flow passage.

With this arrangement, both films similarly flex or deform in response non-draw mechanical vibrations or air flow -- such as the disturbances caused by a drop to the floor -- but only the first film 11 responds to the air flow caused by a user's draw. The differential, then, between the electric signals produced by the films will be representative only of a user's draw. In this regard, the output signal from the first film 11 can be connected to one input of a differential amplifier 40, and the output signal (or reference signal) from the second film 13 can be connected to a second input of the same differential amplifier 40. The output signal of the amplifier 40 should be representative, then, of the flow of air due to a user's draw, and not of any other potential mechanical or air flow disturbances. And

2020057385

Source: https://www.industrydocuments.ucsf.edu/docs/ktgm0000

only such output signal shall be forwarded to the electric control circuit, described below, to initiate heating of flavor-generating material.

A more-preferred embodiment is shown in FIG. 4, where a piezoelectric film flow drum is disposed within the air flow passage of the flavor-generating article. A shallow rigid cylinder 14 has attached to it on its open, opposing ends, two piezoelectric films 15. The cylinder and the films define a chamber which is air-tight, but for two air flow ports 16 which coincide with the air flow passage of the article. As in the other embodiments, the piezoelectric films create electric signals due to deflection or deformation. The output signals from the two films are connected in series in an electric summing circuit.

With this arrangement, if a user draws on one end of the flavor-generating article, the air flow within the air passage will create a pressure drop within the drum chamber, and thereby cause each of the opposing films to deflect inward toward the other. The resultant electric signals are summed by the series circuit to create a true draw signal to initiate heating of flavor-generating material. On the other hand, if the piezoelectric films are caused to deflect by non-draw mechanical vibrations -- which result, for example, from a drop to the floor -- they will both deflect in the same direction. The resultant electric signals are passed through the electric summing circuit and negated. This arrangement thus reduces the chance that the heating sequence will be initiated in response to non-draw activity.

An alternative embodiment is shown in FIG. 5, where flexible conductive films 17 are similarly disposed within the flavor-generating article as in

2020057386

Source: https://www.industrydocuments.ucsf.edu/docs/ktgm0000

FIG. 4, but where such opposing films 17 are circuited to act as capacitor plates which maintain between them a capacitance defined by:

$$C = \epsilon_o \frac{A}{d}$$

where A is area, d is the separation distance between the plates, and $\epsilon_o = 8.85 \times 10^{-12} \frac{F}{M}$.

When a user draws on one end of the flavor-generating article, air flows within the article and between the plates, and the resultant drop in pressure causes each of the opposing films to deflect toward the other. This change in distance between the capacitor plates changes the capacitance between the plates, and that change in capacitance can be monitored to initiate the heating sequence. For example, a common phase-locked loop circuit may be used to set an oscillator frequency based on the capacitance. As the capacitance changes, the frequency changes. A change in the phase-locked loop analog output can then be measured.

As is more fully described above with reference to FIG. 4, non-draw mechanical vibrations will likely result in both films deflecting in the same direction. And because the distance between the plates similarly does not vary in response to non-draw vibrations, this embodiment serves to reduce the chance that the heating sequence will be triggered in response to non-draw activity.

Each of the above-described electro-mechanical air flow monitors thus produces an electric signal in response to, and representative of, a user's draw. Several of the embodiments also suppress any electric signal that may be created in response to non-draw air flow or mechanical vibrations. In order to further reduce the risk that the heating sequence might

202005738?

Source: https://www.industrydocuments.ucsf.edu/docs/ktgm0000

be falsely or prematurely initiated in response to non-draw activity, the electro-mechanical air flow monitor of the present invention may be embodied within a control system to differentiate between the above-described draw and non-draw, or true and false, signals. The signal generated by the air flow monitor is first passed through the remainder of the control system. The system is circuited such that it will only produce an active output signal in response to a true draw signal. Only such an active output signal will initiate the heating sequence.

The control system may include several subsystems connected in series. The first subsystem is the electro-mechanical air flow monitor described above. The air flow monitor generates an electric signal in response to, and representative of, air flow within the air passage of the flavor-generating article.

The second subsystem may be a signal limiter circuit used to block out signals above a certain level to protect the circuit components. The third subsystem may be a lowpass filter circuit used to eliminate signals above a chosen cutoff frequency, which would usually be spurious signals not representative of user draw activity. The fourth subsystem may be a threshold circuit used to produce a signal only in response to an incoming signal of at least a preselected threshold value, and thus reduce or eliminate the low frequency or low amplitude signals that might be associated with non-draw activity, e.g., finger handling of the article. The above-described control system is more fully described in co-pending and commonly assigned U.S. Patent Application Ser. No. 07/709,023, which is hereby incorporated by reference in its entirety.

2020057388

Source: https://www.industrydocuments.ucsf.edu/docs/ktgm0000

As mentioned above, the control system will only produce an active output signal in response to a true draw signal, and only such an active output signal will initiate the heating sequence (or trigger the heater activation control system, also described in detail in U.S. Patent Application Ser. No. 07/709,023).

Thus, the above-described electro-mechanical air flow monitor initiates heating of flavor-generating material in response to a user's normal smoking behavior, and is resistant to false non-draw air flow or pressure changes. One skilled in the art will appreciate that the present invention can be practiced by other than the described embodiments, which are presented for purposes of illustration, and not of limitation. The present invention is limited only by the claims which follow.

2020057389

Source: https://www.industrydocuments.ucsf.edu/docs/ktgm0000

I Claim:

1. An electro-mechanical air flow monitor for an electric flavor-generating article, comprising:

a conductive film movably disposed within an air flow channel of said article such that said film deflects or deforms in response to air flow through said channel and produces a first electric signal representative of said air flow.

2. The electro-mechanical air flow monitor of claim 1 wherein said conductive film is piezoelectric film.

3. The electro-mechanical air flow monitor of claim 2 wherein said piezoelectric film is an elongated strip, and where one end of said strip is fixed to an inside wall of the article and the free end of said strip is movably disposed within the air channel of the article.

4. The electro-mechanical air flow monitor of claim 2 wherein said piezoelectric film is a disc, and where said disc is fixed at its circumference to the inside wall of the article and extends radially inward such that a portion of the disc is movably disposed within the air channel of the article.

5. An electro-mechanical air flow monitor for an electric flavor-generating article, comprising:

a first conductive film movably disposed within an air flow channel of said article such that said film deflects or deforms in response to air flow through said channel, or other potential non-draw disturbances, and produces an electric signal

2020057390

Source: https://www.industrydocuments.ucsf.edu/docs/ktgm0000

representative of said air flow or other potential non-draw disturbances;

a second conductive film movably disposed adjacent the first conductive film, but not within the air flow channel of said article, such that said film deflects or deforms only in response to non-draw disturbances; and

an electric differential amplifier circuit, having connected at its inputs the electric signal produced by the first conductive film and the electric signal produced by the second conductive film, and at its output a resultant first electric signal.

6. The electro-mechanical air flow monitor of claim 5 wherein said conductive films are piezoelectric films.

7. The electro-mechanical air flow monitor of claim 6 wherein said piezoelectric films are elongated strips, and where one end of each strip is fixed to an inside wall of the article and the free end of each strip is movably disposed within the article, the free end of the first piezoelectric film movably disposed within the air channel of the article, and the free end of the second piezoelectric film movably disposed without the air channel of the article.

8. An electro-mechanical air flow monitor for an electric flavor-generating article, comprising:

a shallow rigid cylinder having attached to it on its open, opposing ends, two conductive films which, together with the cylinder, define a chamber which is air-tight, but for two air flow ports through said cylinder which coincide with an air flow channel of the article, and all of which is disposed within

2020057391

Source: https://www.industrydocuments.ucsf.edu/docs/ktgm0000

said air flow channel of said article such that each of said films deflects or deforms towards the other in response to air flow through said channel and produces an electric signal representative of said air flow; and

an electric summing circuit, having connected in series the electric signals produced by each conductive film, and at its output a resultant first electric signal.

9. The electro-mechanical air flow monitor of claim 8 wherein said conductive films are piezoelectric films.

10. An electro-mechanical air flow monitor for an electric flavor-generating article, comprising:

two conductive films, each having a planar surface, and both of which are opposingly disposed within an air flow channel of said article such that their planar surfaces extend parallel to said air flow channel and define a distance between themselves, and such that each of said films deflects or deforms toward the other in response to air flow through said channel; and

an electric circuit that measures the capacitance maintained between the two films, such capacitance representative of said air flow, and the output of said electric circuit being a first electric signal.

11. A control device for an electric flavor-generating article, comprising:

the electro-mechanical air flow monitor of claims 1, 5, 8, or 10; and

2020057392

Source: https://www.industrydocuments.ucsf.edu/docs/ktgm0000

means for electrically heating flavor-generating material in response to said first electric signal.

12. A control device for an electric flavor-generating article, comprising:

the electro-mechanical air flow monitor of claims 1, 5, 8, or 10;

means for producing a second electric signal only when said first electric signal corresponds to user draw air flow; and

means for electrically heating flavor-generating material in response to said second electric signal.

13. The control device of claim 12 wherein the means for producing a second electric signal is an electric control circuit.

14. The control device of claim 13 wherein the electric control circuit comprises a threshold circuit.

15. The control device of claim 13 wherein the electric control circuit comprises a lowpass filter circuit connected in series with a threshold circuit.

16. The control device of claim 13 wherein the electric control circuit comprises a signal limiter circuit connected in series with a threshold circuit.

17. The control device of claim 13 wherein the electric control circuit comprises a signal limiter circuit, a lowpass filter circuit, and a threshold circuit, all connected in series.

202005739

Source: https://www.industrydocuments.ucsf.edu/docs/ktgm0000

18. The control device of claim 11 wherein the means for electrically heating flavor-generating material in response to said first electric signal includes a heater activation control circuit, comprising:

means for selecting one of a plurality of charges of flavor-generating material; and

means, initiated in response to said first electric signal, for applying a pulse of electrical energy to heat the selected one of the plurality of charges of flavor-generating material.

19. The control device of claim 12 wherein the means for electrically heating flavor-generating material in response to said second electric signal includes a heater activation control circuit, comprising:

means for selecting one of a plurality of changes of flavor-generating material; and

means, initiated in response to said second electric signal, for applying a pulse of electrical energy to heat the selected one of the plurality of charges of flavor-generating material.

2020057394

Source: https://www.industrydocuments.ucsf.edu/docs/ktgm0000

ABSTRACT OF THE DISCLOSURE

The invention relates to an electro-mechanical air flow monitor adapted to initiate a heating sequence within an electric flavor-generating article. Conductive film is movably disposed within the air passage of the article such that it may be deflected or deformed in response to air flow (user draw) within the passage, and thereby create an electric signal representative of such air flow to initiate heating of flavor-generating material. Various arrangements of piezoelectric pairs are provided in order to prevent false or premature triggering of the heating sequence. Alternatively, a pair of conductive films are circuited to act as capacitor plates and are disposed within the air passage such that, in response to a user's draw, they are displaced in relation to each other, and thereby create an electric signal representative of such draw to initiate heating of flavor-generating material.

202005739S

Source: https://www.industrydocuments.ucsf.edu/docs/ktgm0000

DECLARATION AND POWER OF ATTORNEY

I, Charles T. Higgins, declare that I am a citizen of

REDACTED REDACTED

that I verily believe myself to be the original, first and sole inventor of the invention or discovery in:

FLOW-MONITORING DEVICE
FOR A FLAVOR-GENERATING ARTICLE

which is described and claimed in the attached specification and for which a patent is sought;

that I have reviewed and do understand the content of said specification, including the claims, and acknowledge my duty to disclose to the United States Patent and Trademark Office information known by me to be material to patentability as defined in Title 37, Code of Federal Regulations, § 1.56; and

that I do not know and do not believe that this invention or discovery was ever known or used in the United States of America before my invention or discovery thereof, or patented or described in any printed publication in any country before my invention or discovery thereof, or more than one year prior to this application; or in public use or on sale in the United States of America more than one year prior to this application; that this invention or discovery has not been patented or made the subject of an inventor's certificate issued before the date of this application in any country foreign to the United States of America on an application filed by me or my legal representatives or assigns more than twelve months prior to this application; and that no application for patent or inventor's certificate on this invention or

20200573396

Source: https://www.industrydocuments.ucsf.edu/docs/ktgm0000

discovery has been filed in any country foreign to the United States of American by me or my legal representatives or assigns.

I hereby appoint James E. Schardt, Esq., Reg. No. 23,033, Charles E. B. Glenn, Esq., Reg. No. 29,796, Charles B. Smith, Esq., Reg. No. 16,763, Albert E. Fey, Esq., Reg. No. 19,018, W. Edward Bailey, Esq., Reg. No. 30,994, and James P. Bergin, Esq., Reg. No. 34,548, my attorneys, with power of substitution, and with power of appointment of associate attorneys, and of revocation of their powers, to prosecute this application and any divisions, continuations in whole or in part, renewals and reissues of the same, and to transact all business in the Patent and Trademark Office connected therewith;

and I request that communications be sent to:

James P. Bergin, Esq.
c/o FISH & NEAVE
875 Third Avenue
New York, New York 10022-6250

and that telephone calls be directed to:

James P. Bergin, Esq.
(212) 715-0600

Wherefore, I pray that Letters Patent be granted to me for the invention or discovery described and claimed in the attached specification and claims, and I hereby subscribe my name to the foregoing specification and claims, declaration, and power of attorney.

I declare, further, that I understand the English language and that all statements made herein of my own knowledge are true, and that all statements made on information and belief are believed to be true; and, further, that these statements were made with the knowledge that willful false statements and the like so made are punishable by fine or imprisonment, or both,

20200572397

Source: https://www.industrydocuments.ucsf.edu/docs/ktgm0000

under Section 1001 of Title 18 of the United States Code and that such willful false statements may jeopardize the validity of the application or any patent issuing thereon.

8/10/92
Date

Charles T. Higgins
Charles T. Higgins

2020057398

Source: https://www.industrydocuments.ucsf.edu/docs/ktgm0000

A S S I G N M E N T

WHEREAS, I, Charles T. Higgins, residing and having a post office address REDACTED have made an invention in:

FLOW-MONITORING DEVICE
FOR A FLAVOR-GENERATING ARTICLE

and am about to make application for United States Letters Patent therefor, the same being executed by me on even date herewith; and

WHEREAS, PHILIP MORRIS INCORPORATED, a corporation organized and existing under the laws of the State of Virginia and having an office and place of business at 120 Park Avenue, New York, New York 10017, is desirous of acquiring the entire interest in said invention for the United States, in said United States patent application, and in any United States Letters Patent which may issue thereon;

NOW, THEREFORE, be it known that for and in consideration of the sum of One Dollar ($1.00) to me paid and other good and valuable consideration, the receipt and sufficiency of which is hereby acknowledged;

REEL 6249 FRAME 007

ASSIGNMENT OF
UNITED STATES PATENT RIGHTS

1. I do hereby sell, assign and transfer unto the said PHILIP MORRIS INCORPORATED, its successors, assigns and legal representatives, all right, title and interest in and to said invention and any improvements thereon for the United States, and in and to said United States patent application, including any continuations and divisions thereof, and any substitute applications therefor and all right, title and interest in and to any United States patent which may issue thereon and any reissues of the same; and I hereby authorize and request competent authorities to grant and issue any and all patents on said invention

202005399

Source: https://www.industrydocuments.ucsf.edu/docs/ktgm0000

in the United States to the said PHILIP MORRIS INCORPORATED as the assignee of the entire United States interest therein.

ASSIGNMENT OF
FOREIGN PATENT RIGHTS

WHEREAS, PHILIP MORRIS PRODUCTS INC., a corporation organized and existing under the laws of the State of Virginia and having an office and place of business at 3601 Commerce Road, Richmond, Virginia 23234, is desirous of acquiring the entire interest in said invention outside of the United States, in any foreign patent applications, and in any foreign Letters Patent which may issue thereon;

2. Further in view of the consideration hereinabove referred to, the receipt and sufficiency of which is hereby acknowledged, I do hereby sell, assign, and transfer unto the said PHILIP MORRIS PRODUCTS INC., its successors, assigns and legal representatives, all right, title and interest in and to said invention and any improvements thereon for all foreign countries, including the right to claim priority under the International Convention based on said United States patent application, and all right, title and interest in and to every foreign patent application filed or to be filed on said invention in any foreign country, including renewals, revivals, continuations and divisions thereof, and any substitute applications therefor, and any and all patents which may issue thereon, and any reissues and extensions of the same; and I hereby authorize and request competent authorities to grant and issue any and all patents on said invention in any foreign country to the said PHILIP MORRIS PRODUCTS INC. as the assignee of the entire foreign interest therein.

REEL 6249 FRAME 008

2020057400

Source: https://www.industrydocuments.ucsf.edu/docs/ktgm0000

I further agree to execute upon request of assignee PHILIP MORRIS INCORPORATED such additional documents, if any, as are necessary and proper to secure patent protection on said invention in the United States, and to execute upon request of assignee PHILIP MORRIS PRODUCTS INC. such additional documents, if any, as are necessary and proper to secure patent protection on said invention throughout all other countries of the world, and to otherwise give full effect to and perfect the rights of assignee PHILIP MORRIS INCORPORATED in the United States and of assignee PHILIP MORRIS PRODUCTS INC. outside the United States.

IN TESTIMONY WHEREOF, I have hereunto signed my name and affixed my seal on the date indicated hereinafter:

REEL6249 FRAME009

8/10/92
(Date)

Charles T. Higgins
Charles T. Higgins

COMMONWEALTH OF VIRGINIA)
: ss.:
CITY OF RICHMOND)

On this 10th day of August, 1992, appeared before me in person the above-named Charles T. Higgins and acknowledged the above to be his signature and that he signed, sealed and delivered the above instrument as his voluntary act and deed, and for the uses and purposes therein set forth.

Rhonda E. Hardin
Notary Public

(Notarial seal)

My Commission Expires:
2/26/93

RECORDED
PATENT AND TRADEMARK
OFFICE
AUG 12 1992

202057401

Source: https://www.industrydocuments.ucsf.edu/docs/ktgm0000

FIG. 1A

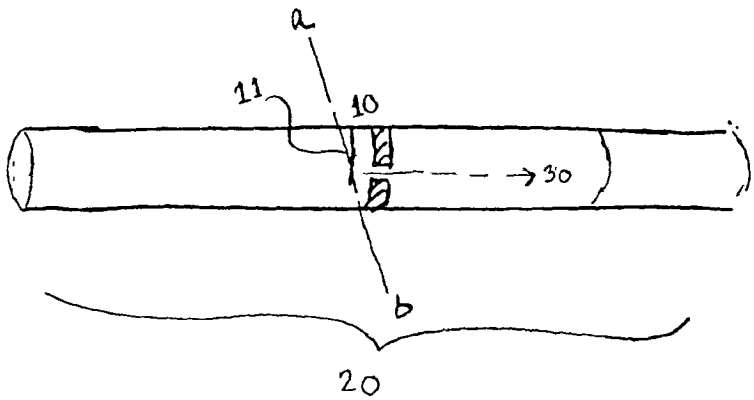

1B

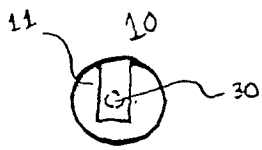

2020057402

Source: https://www.industrydocuments.ucsf.edu/docs/ktgm0000

FIG. 2A

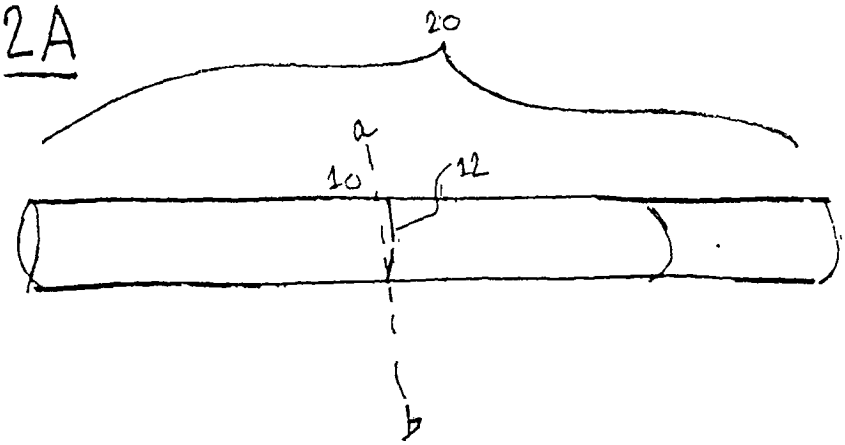

2B

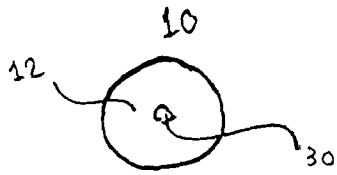

2020057403

Source: https://www.industrydocuments.ucsf.edu/docs/ktgm0000

FIG. 3A

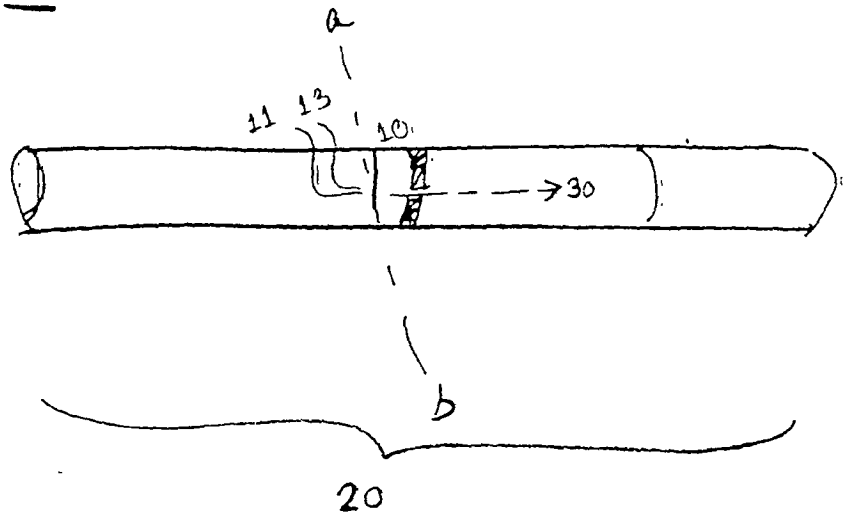

3B

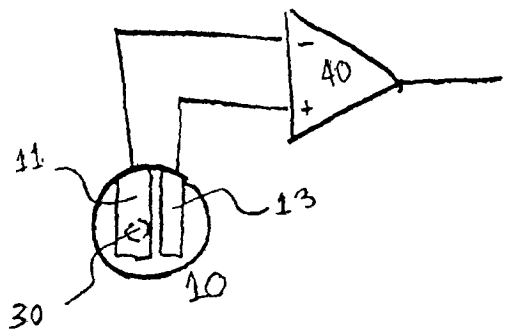

2020057404

Source: https://www.industrydocuments.ucsf.edu/docs/ktgm0000

FIG. 4A

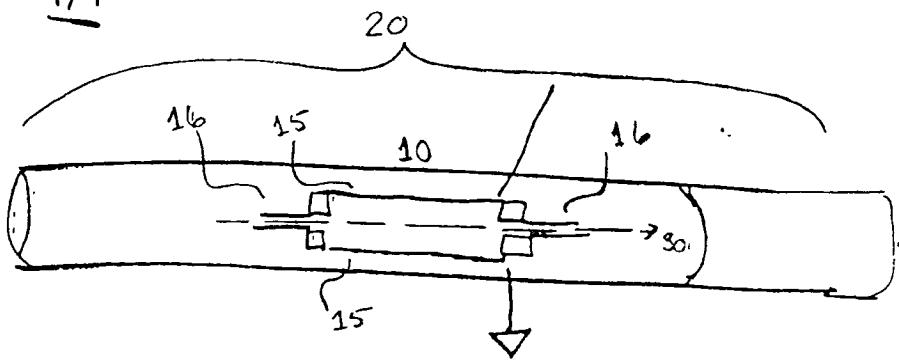

4B

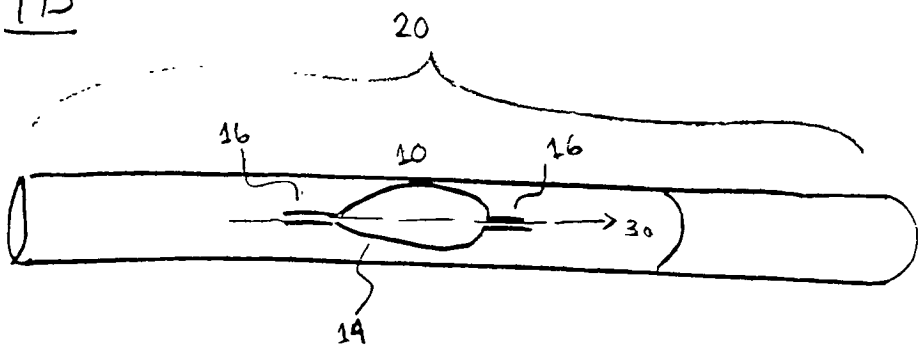

2020057405

Source: https://www.industrydocuments.ucsf.edu/docs/ktgm0000

FIG. 5A

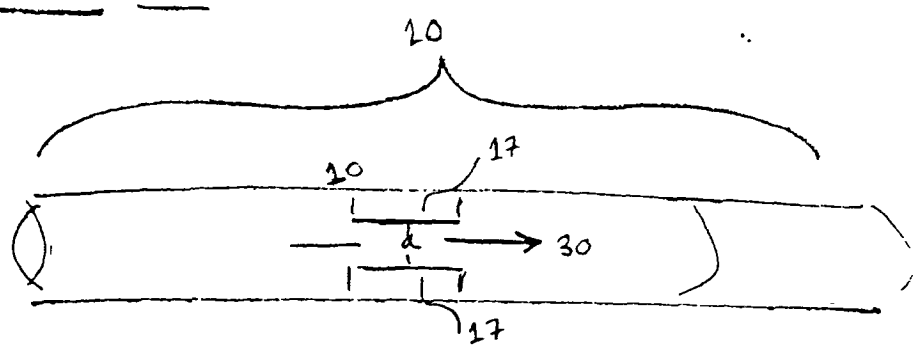

5B

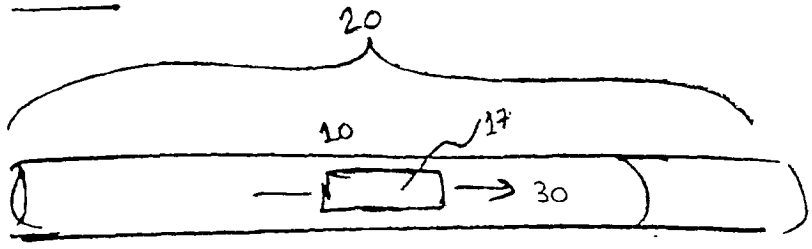

Source: https://www.industrydocuments.ucsf.edu/docs/ktgm0000